GATE VALVE

DUCTILE IRON | PN-25 (Rising Spindle)

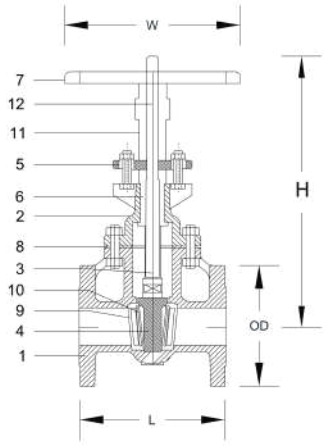

DESIGN & COMPLIANCES

EN 1171, EN 558-1 (3), BS 5150, BS 5163.

END CONNECTION

BS EN 1092-2, DIN 2501, BS 4504

TESTING STANDARD

API 598, BS 6755, EN 12266-1

APPLICATIONS

Hot & Cold Water, Oil, Gas, Raw Water, Waste Water

Sr. No	COMPONENTS	SPECIFICATIONS
1	Body	Ductile Iron EN-GJS-500
2	Bonnet	Ductile Iron EN-GJS-500
3	Stem (Optional)	SS 304 | SS 316 | SS Cr13 | Brass CW614N | Bronze CC491K
4	Wedge	Ductile Iron EN-GJS-500
5	Gland	Ductile Iron EN-GJS-500
6	Gland Packing	Flexible Graphite | Non-Asbestos
7	Handwheel	Ductile Iron EN-GJS-500
8	Gasket	Flexible Graphite | Non-Asbestos
9	Body Seat Ring (Optional)	SS 304 | SS 316 | SS Cr13 | Brass CW614N | Bronze CC491K
10	Disc Seat Ring (Optional)	SS 304 | SS 316 | SS Cr13 | Brass CW614N | Bronze CC491K
11	Yoke	Ductile Iron EN-GJS-500
12	Yoke Sleeve (Optional)	SS 304 | SS 316 | SS Cr13 | Brass CW614N | Bronze CC491K
Paint		Epoxy | Corrosion Resistant | Polyurethane

Special Configurations (Subject to manufacturer's approval)

- Gear Operated
- Brass, Bronze Seat Rings
- Chain Wheel with Locking Arrangement

DIMENSIONS (MM)															
Sizes	**50**	**65**	**80**	**100**	**125**	**150**	**200**	**250**	**300**	**350**	**400**	**450**	**500**	**600**	**700**
Face to Face (L)	178	190	203	229	254	267	292	330	356	381	406	432	457	508	610
OD (D)	165	185	200	235	270	300	360	425	485	555	620	670	730	845	960
Height (H)	390	445	510	620	680	770	940	1120	1335	1500	1680	1810	2030	2370	2600
Wheel (W)	200	200	225	240	240	285	290	400	495	495	495	495	700	700	1000